Generation Interconnection

Impact Study Report

for

Queue Project AE2-187

SHOCKOE DP-CHATHAM 69 KV

36 MW Capacity / 60 MW Energy

Revision 3: July 2022

Revision 2: April 2022

Revision 1: May 2020

Revision 0: February 2020

Table of Contents

1 Introduction 4
2 Preface 4
3 Revision History 4
3.1 July 2022 4
3.2 April 2022 4
4 General 5
4.1 Point of Interconnection 6
4.2 Cost Summary 6
5 Transmission Owner Scope of Work 7
6 Attachment Facilities 8
7 Direct Connection Cost Estimate 8
8 Non-Direct Connection Cost Estimate 9
9 Schedule 10
10 Transmission Owner Analysis 11
10.1 Power Flow Analysis 11
10.2 Short Circuit Analysis 11
10.3 Stability Analysis 11
11 Interconnection Customer Requirements 12
11.1 System Protection 12
11.2 Compliance Issues and Interconnection Customer Requirements 12
11.3 Power Factor Requirements 12
12 Revenue Metering and SCADA Requirements 13
12.1 PJM Requirements 13
12.1.1 Meteorological Data Reporting Requirement 13
12.2 Dominion Requirements 13
13 Network Impacts 14
13.1 Generation Deliverability 16
13.2 Multiple Facility Contingency 16
13.3 Contribution to Previously Identified Overloads 16
13.4 Potential Congestion due to Local Energy Deliverability 16
14 System Reinforcements 18

© PJM Interconnection 2020. All rights reserved

15 Flow Gate Details 23
15.1 Index 1 24
15.2 Index 2 26
15.3 Index 3 28
15.4 Index 4 31
15.5 Index 5 33
16 Contingency Details 35
17 Affected Systems 39
17.1 TVA 39
17.2 Duke Energy Progress 39
18 Short Circuit 41
19 Stability Analysis and Reactive Power Assessment 43
20 Light Load Analysis 45
Attachment 1: One Line Diagram 46

© PJM Interconnection 2020. All rights reserved

1 Introduction

This System Impact Study (SIS) has been prepared in accordance with the PJM Open Access Transmission Tariff, 205, as well as the Feasibility Study Agreement between 174 Power Global Properties, LLC, the Interconnection Customer (IC), and PJM Interconnection, LLC (PJM), Transmission Provider (TP). The Interconnected Transmission Owner (ITO) is Virginia Electric and Power Company (VEPCO).

2 Preface

The intent of the System Impact Study is to determine a plan, with approximate cost and construction time estimates, to connect the subject generation interconnection project to the PJM network at a location specified by the Interconnection Customer. As a requirement for interconnection, the Interconnection Customer may be responsible for the cost of constructing: Network Upgrades, which are facility additions, or upgrades to existing facilities, that are needed to maintain the reliability of the PJM system. All facilities required for interconnection of a generation interconnection project must be designed to meet the technical specifications (on PJM web site) for the appropriate transmission owner.

In some instances an Interconnection Customer may not be responsible for 100% of the identified network upgrade cost because other transmission network uses, e.g. another generation interconnection or merchant transmission upgrade, may also contribute to the need for the same network reinforcement. The possibility of sharing the reinforcement costs with other projects may be identified in the Feasibility Study, but the actual allocation will be deferred until the System Impact Study is performed.

The System Impact Study estimates do not include the feasibility, cost, or time required to obtain property rights and permits for construction of the required facilities. The project developer is responsible for the right of way, real estate, and construction permit issues. For properties currently owned by Transmission Owners, the costs may be included in the study.

The Interconnection Customer seeking to interconnect a wind or solar generation facility shall maintain meteorological data facilities as well as provide that meteorological data which is required per Schedule H to the Interconnection Service Agreement and Section 8 of Manual 14D.

3 Revision History

3.1 July 2022

This revision is being issued to correct the line length and cost for AEP upgrade N6224. After confirmation with AEP, the line length is 6.5 miles and the cost is $9,750,000.

3.2 April 2022

This revision is being published to incorporate the results of a re-tool analysis.

© PJM Interconnection 2020. All rights reserved

4 General

The Interconnection Customer (IC), has proposed a Solar/Storage generating facility located in Pittsylvania County, Virginia. The installed facilities will have a total capability of 60 MW with 36 MW of this output being recognized by PJM as Capacity. The proposed in-service date for this project is September 1, 2020. This study does not imply a TO commitment to this in-service date.

Queue Number	**AE2-187**
Project Name	SHOCKOE DP-CHATHAM 69 KV
Interconnection Customer	174 Power Global Properties, LLC
State	Virginia
County	Pittsylvania
Transmission Owner	Dominion
MFO	60
MWE	60
MWC	36
Fuel	Solar
Basecase Study Year	2022

© PJM Interconnection 2020. All rights reserved

4.1 Point of Interconnection

AE2-187 will interconnect with the Dominion transmission system tapping the Shockoe DP to Chatham 69 kV line. This is the Point of Interconnection (POI) chosen by the IC with the ITO's transmission system. The IC is responsible for securing right-of-way, permits and constructing the proposed attachment line from the solar facility site to the proposed new switching station. The IC may not install any facilities on Dominion's right-of-way without first obtaining the necessary approval from Dominion Energy.

4.2 Cost Summary

The AE2-187 project will be responsible for the following costs:

Description	Total Cost
Attachment Facilities	$ 1,700,000
Direct Connection Network Upgrade	$ 1,500,000
Non Direct Connection Network Upgrades	$ 1,600,000
Total Costs	**$ 4,800,000**

In addition, the AE2-187 project may be responsible for a contribution to the following costs

Description	Total Cost
System Upgrades	**$20,250,138**

Note: PJM Open Access Transmission Tariff (OATT) section 217.3A outline cost allocation rules. The rules are further clarified in PJM Manual 14A Attachment B. The allocation of costs for a network upgrade will start with the first Queue project to cause the need for the upgrade. Later queue projects will receive cost allocation contingent on their contribution to the violation and are allocated to the queues that have not closed less than 5 years following the execution of the first Interconnection Service Agreement which identifies the need for this upgrade.

© PJM Interconnection 2020. All rights reserved

5 Transmission Owner Scope of Work

Dominion assessed the impact of the proposed Queue Project AE2-187 was evaluated as a 36.0 MW Capacity (60.0 MW Energy) injection at the tap of the Shockoe DP to Chatham 69 kV line in the Dominion Transmission System, for compliance with NERC Reliability Criteria on Dominion Transmission System. The system was assessed using the summer 2022 AE2 case provided to Dominion by PJM. When performing a generation analysis, Dominion's main analysis will be load flow study results under single contingency (both normal and stressed system conditions). Dominion Criteria considers a transmission facility overloaded if it exceeds 94% of its emergency rating under normal and stressed system conditions. A full listing of Dominion's Planning Criteria and interconnection requirements can be found in the Company's Facility Connection Requirements which are publicly available at: http://www.dominionenergy.com.

The results of these studies evaluate the system under a limited set of operating conditions and do not guarantee the full delivery of the capacity and associated energy of this proposed generation facility under all operating conditions. NERC Planning and Operating Reliability Criteria allow for the re-dispatch of generating units to resolve projected and actual deficiencies in real time and planning studies. Specifically in Planning Studies NERC Category C Contingency Conditions (Bus Fault, Tower Line, N-1-1, and Stuck Breaker scenarios) allow for re-dispatch of generating units to resolve potential reliability deficiencies. For Dominion Planning Criteria the re-dispatch of generating units for these contingency conditions is allowed as long as the projected loading does not exceed 100% of a facility Load Dump Rating.

The required Attachment Facilities, Direct Connection and Non-Direct Connection work for the interconnection of the AE2-187 generation project to the Dominion Transmission System is detailed in the following sections. The associated one-line with the generation project attachment facilities and primary direct and non-direct connection are shown in Attachment 1.

Note that the ITO findings were made from a conceptual review of this project. A more detailed review of the connection facilities and their cost will be identified in a future study phases. Further note that the cost estimate data contained in this document should be considered high level estimates since it was produced without a detailed engineering review. The applicant will be responsible for the actual cost of construction. ITO herein reserves the right to return to any issues in this document and, upon appropriate justification, request additional monies to complete any reinforcements to the transmission systems.

© PJM Interconnection 2020. All rights reserved

6 Attachment Facilities

Generation Substation: Install metering and associated protection equipment. Estimated Cost is $500,000.

Transmission: Construct approximately one span of 69 kV Attachment line between the generation substation and a new AE2-187 Switching Station. The estimated cost for this work is $1,200,000.

The estimated total cost of the Attachment Facilities is $1,700,000.

It is estimated to take 18-24 months to complete this work. These preliminary cost estimates are based on typical engineering costs. A more detailed engineering cost estimates are normally done when the IC provides an exact site plan location for the generation substation during the Facility Study phase. The total preliminary cost estimate for the Attachment work is given in the table below. These costs do not include CIAC Tax Gross-up.

Description	Total Cost
Substation (Metering)	$ 500,000
Transmission (one span)	$ 1,200,000
Total Attachment Facility Costs	$ 1,700,000

It is estimated to take 18-24 months to complete this work upon execution of an Interconnection Construction Service Agreement (ICSA). These preliminary cost estimates are based on typical engineering costs. A more detailed engineering cost estimates are normally done when the IC provides an exact site plan location for the generation substation during the Facility Study phase.

7 Direct Connection Cost Estimate

The total preliminary cost estimate for the Direct Connection work is given in the table below. These costs do not include CIAC Tax Gross-up.

Description	Total Cost
One Breaker Station and Associated Equipment	$ 1,500,000
Total Direct Connection Facility Costs	$ 1,500,000

Substation: Add a single breaker station to accommodate the project. It is estimated to take 24-36 months to complete this work.

The total preliminary cost estimate for the Direct Connection work is given in the table below. These costs do not include CIAC Tax Gross-up.

© PJM Interconnection 2020. All rights reserved

8 Non-Direct Connection Cost Estimate

The total preliminary cost estimate for the Non-Direct Connection work is given in the table below. These costs do not include CIAC Tax Gross-up.

Description	Total Cost
Transmission (One span)	$ 1,600,000
Total Non-Direct Connection Facility Costs	$ 1,600,000

Remote Terminal Work: During the Facilities Study, ITO's System Protection Engineering Department will review transmission line protection as well as anti-islanding required to accommodate the new generation and interconnection substation. System Protection Engineering will determine the minimal acceptable protection requirements to reliably interconnect the proposed generating facility with the transmission system. The review is based on maintaining system reliability by reviewing ITO's protection requirements with the known transmission system configuration which includes generating facilities in the area. This review may determine that transmission line protection and communication upgrades are required at remote substations.

© PJM Interconnection 2020. All rights reserved

9 Schedule

The schedule for the required Network Impact Reinforcements will be more clearly identified in future study phases. The estimate elapsed time to complete each of the required reinforcements is identified in the "System Reinforcements" section of the report.

© PJM Interconnection 2020. All rights reserved

10 Transmission Owner Analysis

10.1 Power Flow Analysis

PJM performed a power flow analysis of the transmission system using a 2022 summer peak load flow model and the results were verified by Dominion. Additionally, Dominion performed an analysis of its transmission system. At the POI, the AE2-187 project contributes to overloads on the Dominion transmission system as shown in the "Network Impact" section of the report. The estimated cost of system reinforcements necessary to mitigate these overloads is also provided.

10.2 Short Circuit Analysis

PJM performed a short circuit analysis and the results were verified by Dominion. The connection of AE2-187 project to the system does not result in any newly overdutied circuit breakers on the Dominion transmission system and does not have a significant fault current contribution to existing overdutied circuit breakers

10.3 Stability Analysis

PJM will complete a dynamic stability analysis as part of the Facilities Study. The results of this analysis will be reviewed by Dominion. Should stability concerns be identified in PJM's study, Dominion will develop appropriate system reinforcement(s) and included the estimated cost of any reinforcement(s) in Dominion's System Impact Study report.

© PJM Interconnection 2020. All rights reserved

11 Interconnection Customer Requirements

11.1 System Protection

The IC must design its Customer Facilities in accordance with all applicable standards, including the standards in Dominion's "Dominion Energy Electric Transmission Generator Interconnection Requirements" documented in Dominion's Facility Interconnection Requirements "Exhibit C" located at: https://www.dominionenergy.com/company/moving-energy/electric-transmission-access. Preliminary Protection requirements will be provided as part of the Facilities Study. Detailed Protection Requirements will be provided once the project enters the construction phase.

11.2 Compliance Issues and Interconnection Customer Requirements

The proposed Customer Facilities must be designed in accordance with Dominion's "Dominion's Facility Interconnection Requirements" document located at: https://www.dominionenergy.com/company/moving-energy/electric-transmission-access. In particular, the IC is responsible for the following:

1. The purchase and installation of a fully rated protection device (circuit breaker, circuit switcher, fuse) to protect the IC's GSU transformer(s).
2. The purchase and installation of the minimum required Dominion generation interconnection relaying and control facilities as described in the System Protection noted above. This includes over/under voltage protection, over/under frequency protection, and zero sequence voltage protection relays.
3. The purchase and installation of supervisory control and data acquisition ("SCADA") equipment to provide information in a compatible format to the Dominion Transmission System Control Center.
4. Compliance with the Dominion and PJM generator power factor and voltage control requirements.

The GSU(s) associated with the IC queue request shall meet the grounding requirements as noted in Dominion's "Dominion's Facility Interconnection Requirements" document located at: https://www.dominionenergy.com/company/moving-energy/electric-transmission-access.

The IC will also be required to meet all PJM, SERC, and NERC reliability criteria and operating procedures for standards compliance. For example, the IC will need to properly locate and report the over and under voltage and over and under frequency system protection elements for its units as well as the submission of the generator model and protection data required to satisfy the PJM and SERC audits. Failure to comply with these requirements may result in a disconnection of service if the violation is found to compromise the reliability of the Dominion system.

11.3 Power Factor Requirements

The IC shall design its non-synchronous Customer Facility with the ability to maintain a power factor of at least 0.95 leading (absorbing VARs) to 0.95 lagging (supplying VARs) measured at the high-side of the facility substation transformer(s) connected to the Dominion transmission system.

© PJM Interconnection 2020. All rights reserved

12 Revenue Metering and SCADA Requirements

12.1 PJM Requirements

The Interconnection Customer will be required to install equipment necessary to provide Revenue Metering (KWH, KVARH) and real time data (KW, KVAR) for IC's generating Resource. See PJM Manuals M-01 and M-14D, and PJM Tariff Section 8 of Attachment O.

12.1.1 Meteorological Data Reporting Requirement

The solar generation facility shall provide the Transmission Provider with site-specific meteorological data including:

- Temperature (degrees Fahrenheit)
- Atmospheric pressure (hectopascals)
- Irradiance
- Forced outage data

12.2 Dominion Requirements

See Section 3.4.6 "Metering and Telecommunications" of Dominion's "Dominion's Facility Interconnection Requirements" document located at: https://www.dominionenergy.com/company/moving-energy/electric-transmission-access.

© PJM Interconnection 2020. All rights reserved

13 Network Impacts

The Queue Project AE2-187 was evaluated as a 60.0 MW (Capacity 36.0 MW) injection at the tap of the Shockoe DP to Chatham 69 kV line in the Dominion area. Project AE2-187 was evaluated for compliance with applicable reliability planning criteria (PJM, NERC, NERC Regional Reliability Councils, and Transmission Owners). Project AE2-187 was studied with a commercial probability of 100%. Potential network impacts were as follows:

© PJM Interconnection 2020. All rights reserved

Summer Peak Load Flow

© PJM Interconnection 2020. All rights reserved

13.1 Generation Deliverability

(Single or N-1 contingencies for the Capacity portion only of the interconnection)

Overload Number	Contingency Type	Name	Affected Area	Facility Description	Bus From	Bus To	Circuit	Power Flow	Loading % Initial	Loading % Final	Rating Type	Rating MVA	MW Contribution	Flowgate Appendix
1	Non	Non	AEP - AEP	05JOHNMT-05NEWLDN 138 kV line	242687	242734	1	AC	97.18	104.48	NR	167	12.29	1

13.2 Multiple Facility Contingency

(Double Circuit Tower Line, Fault with a Stuck Breaker, and Bus Fault contingencies for the full energy output)

None

13.3 Contribution to Previously Identified Overloads

(This project contributes to the following contingency overloads, i.e. "Network Impacts", identified for earlier generation or transmission interconnection projects in the PJM Queue)

Overload Number	Contingency Type	Contingency Name	Affected Area	Facility Description	Bus From	Bus To	Circuit	Power Flow	Loading % Initial	Loading % Final	Rating Type	Rating MVA	MW Contribution	Flowgate Appendix
1	Non	Non	DVP - AEP	4ALTVSTA-05OTTER 138 kV line	314667	242741	1	AC	103.29	110.6	NR	167	12.29	2
2	LFFB	AEP_P4_#10213_05CLOV4 EQ 999_A	AEP - AEP	05BANSTR-05EDAN 2 138 kV line	242549	242632	1	AC	118.63	121.98	ER	296	10.19	3
3	LFFB	AEP_P4_#10210_05CLOVRD 138_A2	AEP - AEP	05BANSTR-05EDAN 2 138 kV line	242549	242632	1	AC	118.5	121.85	ER	296	10.18	
4	Non	Non	AEP - AEP	05OTTER-05JOHNMT 138 kV line	242741	242687	1	AC	100.92	108.22	NR	167	12.29	4
5	N-1	AEP_P1-2_#5366-B	AEP - AEP	05SMITHMTN2-05ROCKCA 138 kV line	247499	242775	1	AC	102.09	104.36	ER	277	6.35	5

13.4 Potential Congestion due to Local Energy Deliverability

PJM also studied the delivery of the energy portion of this interconnection request. Any problems identified below are likely to result in operational restrictions to the project under study. The developer can proceed with network upgrades to eliminate the operational restriction at their discretion by submitting a Merchant Transmission Interconnection request.

Note: Only the most severely overloaded conditions are listed below. There is no guarantee of full delivery of energy for this project by fixing only the conditions listed in this section. With a Transmission Interconnection Request, a subsequent analysis will be performed which shall study all overload conditions associated with the overloaded element(s) identified.

Overload Number	Contingency Type	Name	Affected Area	Facility Description	Bus From	Bus To	Circuit	Power Flow	Loading % Initial	Loading % Final	Rating Type	Rating MVA	MW Contribution	Flowgate Appendix
1	Non	Non	DVP - AEP	4ALTVSTA-05OTTER 138 kV line	314667	242741	1	AC	122.46	134.39	NR	167	20.49	
2	N-1	AEP_P1-2_#5471-A	DVP - AEP	4ALTVSTA-05OTTER 138 kV line	314667	242741	1	AC	108.14	116.63	ER	245	20.99	

© PJM Interconnection 2020. All rights reserved

3	Non	Non	DVP - DVP	4ALTVSTA 138/69 kV transformer	314670	314667	1	AC	93.45	143.47	NR	129	60	
4	Non	Non	DVP - DVP	2STONE MIL-2ALTVSTA 69 kV line	314730	314670	1	AC	111.88	169.3	NR	102	60	
5	N-1	DVP_P1-2: LN 35_AE2-185B_AE2-283A	DVP - DVP	2STONE MIL-2ALTVSTA 69 kV line	314730	314670	1	AC	57.83	115.15	ER	102	60	
6	Non	Non	DVP - DVP	2ALTAVISTADP-2STONE MIL 69 kV line	314735	314730	1	AC	68.67	136.61	NR	86	60	
7	Non	Non	DVP - DVP	2MT A TP-2ALTAVISTADP 69 kV line	314739	314735	1	AC	53.62	100.73	NR	123	60	
8	Non	Non	DVP - DVP	AE2-187 TAP-2SHKO DP 69 kV line	941820	314736	1	AC	10.61	100.51	NR	55	60	
9	N-1	AEP_P1-2_#5419	AEP - AEP	05BANSTR-05EDAN 2 138 kV line	242549	242632	1	AC	118.37	121.71	ER	296	10.18	
10	Non	Non	AEP - AEP	05BANSTR-05EDAN 2 138 kV line	242549	242632	1	AC	98.24	100.76	NR	296	7.79	
11	Non	Non	AEP - AEP	05BANSTR-05EDAN 2 138 kV line	242549	242632	1	AC	98.24	100.76	NR	296	7.79	
12	N-1	AEP_P1-2_#8677	AEP - AEP	05EDAN 2-05EDAN 1 138 kV line	242632	242631	Z1	AC	105.56	106.93	ER	296	4.76	
13	Non	Non	AEP - AEP	05JOHNMT-05NEWLDN 138 kV line	242687	242734	1	AC	116.37	128.32	NR	167	20.49	
14	N-1	DVP_P1-2: LN 31_AE2-291A	AEP - AEP	05JOHNMT-05NEWLDN 138 kV line	242687	242734	1	AC	85.48	95.96	ER	240	25.54	
15	Non	Non	AEP - AEP	05OTTER-05JOHNMT 138 kV line	242741	242687	1	AC	120.09	132.02	NR	167	20.49	
16	N-1	AEP_P1-2_#5471-A	AEP - AEP	05OTTER-05JOHNMT 138 kV line	242741	242687	1	AC	106.5	114.98	ER	245	20.99	
17	N-1	AEP_P1-2_#5366-B	AEP - AEP	05ROCKCA-05MONETA 138 kV line	242775	242720	1	AC	91.02	93.55	ER	409	10.58	
18	N-1	AEP_P1-2_#5366-B	AEP - AEP	05MEADS8-05CLOVRD 138 kV line	243892	242607	1	AC	126.91	130.63	ER	277	10.58	
19	Non	Non	AEP - AEP	05MEADS8-05CLOVRD 138 kV line	243892	242607	1	AC	93.73	96.56	NR	277	8.05	
20	N-1	AEP_P1-2_#5366-B	AEP - AEP	05SMITHMTN2-05ROCKCA 138 kV line	247499	242775	1	AC	126.31	130.03	ER	277	10.58	
21	Non	Non	AEP - AEP	05SMITHMTN2-05ROCKCA 138 kV line	247499	242775	1	AC	95.32	98.18	NR	277	8.05	

© PJM Interconnection 2020. All rights reserved

14 System Reinforcements

New System Reinforcements

(Upgrades required to mitigate reliability criteria violations, i.e. Network Impacts, initially caused by the addition of this project generation)

Violation/ Appendix	Overloaded Facility	Upgrade Description	Network Upgrade Number	Upgrade Cost	AE2-187 Allocation
1	05JOHNMT-05NEWLDN 138 kV line	**AEP** **Project Id:** n6224 **Project Description:** Rebuild/reconductor ACSR ~ 397.5 ~ 30/7 ~ LARK ~ Fe Clamps 9 d, Conductor Section 1, 6.5 miles **Project Type:** FAC **Time Estimate:** 12-18 Months **Cost:** $9,750,000 **New Rating:** **Rate A:** 292 MVA **Rate B:** 330 MVA **Note: AE2-187 is the driver for this Overload/upgrade.**	n6224	$9,750,000	$9,750,000
Total Cost ($)				**$9,750,000**	**$9,750,000**

Contribution to Previously Identified System Reinforcements

(Overloads initially caused by prior Queue positions with additional contribution to overloading by this project. This project may have a % allocation cost responsibility which will be calculated and reported for the Impact Study)

Violation/ Appendix	Overloaded Facility	Upgrade Description	Network Upgrade Number	Upgrade Cost	AE2-187 Allocation

© PJM Interconnection 2020. All rights reserved

<table>
<tr>
<td>2</td>
<td>4ALTVSTA-05OTTER 138 kV line</td>
<td>

<u>DVP</u>

Project Id: n6242

Project Description: Relay Change Outs (Secondary) at Altavista Substation
Project Type: FAC

Time Estimate: 6-12 Months

Cost: $120,000

New Rating:

Rate A: 382 MVA

Rate B: 382 MVA

Rate C: 521 MVA

<u>Cost Allocation Table is:</u>

<table>
<tr><th>Queue Project</th><th>MW Impact</th><th>Cost (%)</th><th>Cost($)</th></tr>
<tr><td>AE2-185</td><td>5.53</td><td>31.03 %</td><td>$37,239</td></tr>
<tr><td>AE2-187</td><td>12.29</td><td>68.97 %</td><td>$82,761</td></tr>
</table>

<u>AEP</u>

Project Id: n5613

Project Description: Rebuild / reconductor 0.9 miles of overhead conductor (ACSR ~ 397.5 ~ 30/7 ~ LARK)

Project Type: FAC

Time Estimate: 24-36 Months

Cost: $1,350,000

New Rating:

Rate A: 287 MVA

</td>
<td>n6242, n5613</td>
<td>$120,000 + $1,350,000</td>
<td>$82,761 +
$931,061</td>
</tr>
</table>

© PJM Interconnection 2020. All rights reserved

<table>
<tr>
<td></td>
<td></td>
<td>
Rate B: 287 MVA

<u>Cost Allocation Table is:</u>

<table>
<tr><th>Queue Project</th><th>MW Impact</th><th>Cost (%)</th><th>Cost($)</th></tr>
<tr><td>AE2-185</td><td>5.53</td><td>31.03%</td><td>$418,939</td></tr>
<tr><td>AE2-187</td><td>12.29</td><td>68.97%</td><td>$931,061</td></tr>
</table>
</td>
<td></td>
<td></td>
<td></td>
</tr>
<tr>
<td>3</td>
<td>05BANSTR-05EDAN 2 138 kV line</td>
<td>
<u>AEP</u>

Project Id: n6457.1

Project Description: Rebuild / reconductor 196 ft. of overhead conductor (ACSR ~ 1033.5~ 45/7 ~ ORTOLAN).

Project Type: FAC

Time Estimate: 48-60 Months

Cost: $55,000

New Rating:

Rate A: 335 MVA

Rate B: 392 MVA

Rate C: 392 MVA

<u>Note: AE1-250 is the driver for this overload/upgrade.</u>

Queue Project AE2-187 presently does not receive cost allocation for this upgrade.

Note 1: as changes to the interconnection process occur, such as prior queued projects withdrawing from the
</td>
<td>n6457.1</td>
<td>$55,000</td>
<td>$0</td>
</tr>
</table>

© PJM Interconnection 2020. All rights reserved

<table>
<tr><td></td><td></td><td>queue, reducing in size, etc, Queue Project AE2-187 could receive cost allocation.

Note 2: Although Queue Project AE2-187 may not have cost responsibility for this upgrade, Queue Project AE2-187 may need this upgrade in-service to be deliverable to the PJM system. If Queue Project AE2-187 comes into service prior to completion of the</td><td></td><td></td><td></td></tr>
<tr><td>4</td><td>05OTTER-05JOHNMT 138 kV line</td><td><u>AEP</u>

Project Id: n6241

Project Description:

1. Replace 05OTTER Sub cond 477 AAC 19 Str
2. Replace JohnMt - Otter Line, ACSR ~ 397.5 ~ 30/7 ~ LARK Conductor Section 1, 7 Miles
Project Type: FAC

Time Estimate: 24-36 Months

Cost: $10,675,000

New Rating:

Rate A: 329 MVA

Rate B: 361 MVA

<u>Cost Allocation Table is:</u>

<table>
<tr><th>Queue Project</th><th>MW Impact</th><th>Cost (%)</th><th>Cost($)</th></tr>
<tr><td>AE2-185</td><td>1.54</td><td>11.14%</td><td>$1,188,684</td></tr>
<tr><td>AE2-187</td><td>12.29</td><td>88.86%</td><td>$9,486,316</td></tr>
</table></td><td>n6241</td><td>$10,675,000</td><td>$9,486,316</td></tr>
<tr><td>5</td><td>05SMITHMTN2-05ROCKCA 138 kV line</td><td>Note: TO informed PJM that rating of this line have been increased. This is no more overload.

New Rating:

Rate A: 409 MVA</td><td>NA</td><td>NA</td><td>NA</td></tr>
</table>

© PJM Interconnection 2020. All rights reserved

		Rate B: 409 MVA			
Total Cost ($)				**$12,200,000**	**$10,500,138**

© PJM Interconnection 2020. All rights reserved

15 Flow Gate Details

The following indices contain additional information about each flowgate presented in the body of the report. For each appendix, a description of the flowgate and its contingency was included for convenience. However, the intent of the appendix section is to provide more information on which projects/generators have contributions to the flowgate in question. Although this information is not used "as is" for cost allocation purposes, it can be used to gage other generators impact.It should be noted the generator contributions presented in the appendices sections are full contributions, whereas in the body of the report, those contributions take into consideration the commercial probability of each project.

© PJM Interconnection 2020. All rights reserved

15.1 Index 1

(AEP - AEP) The 05JOHNMT-05NEWLDN 138 kV line (from bus 242687 to bus 242734 ckt 1) loads from 97.18% to 104.48% (AC power flow) of its normal rating (167 MVA) for non-contingency condition. This project contributes approximately 12.29 MW to the thermal violation.

Bus Number	*Bus Name*	*Full Contribution*
247284	*05LEESVG*	*1.66*
246843	*05SMG1*	*1.01*
246844	*05SMG2*	*2.66*
246845	*05SMG3*	*1.56*
246846	*05SMG4*	*2.75*
246847	*05SMG5*	*1.04*
315156	*1HALLBR1*	*2.86*
315266	*1PLYWOOD A*	*0.39*
933941	*AD1-017 C*	*0.56*
934311	*AD1-055 C*	*1.38*
938451	*AE1-064 C*	*5.18*
940081	*AE1-250 C*	*5.03*
941801	*AE2-185 C*	*12.29*
941821	*AE2-187 C*	*12.29*
942671	*AE2-283 C*	*13.52*
942751	*AE2-291 C*	*13.27*
942761	*AE2-292 C O1*	*16.52*
LTF	*BLUEG*	*1.28*
LTF	*CANNELTON*	*0.06*
LTF	*CARR*	*0.01*
LTF	*CBM-S2*	*1.2*
LTF	*COFFEEN*	*0.1*
LTF	*COTTONWOOD*	*< 0.01*
LTF	*CPLE*	*0.8*
LTF	*DUCKCREEK*	*0.24*
LTF	*EDWARDS*	*0.11*
LTF	*FARMERCITY*	*0.05*
LTF	*GIBSON*	*0.05*
LTF	*NEWTON*	*0.28*
LTF	*PRAIRIE*	*0.4*
LTF	*RENSSELAER*	*0.01*
LTF	*SMITHLAND*	*0.02*
LTF	*TILTON*	*0.15*
LTF	*TRIMBLE*	*0.14*
LTF	*TVA*	*0.04*
919841	*AA2-070*	*0.51*
925661	*AC1-042 C*	*5.45*
925991	*AC1-075 C*	*6.8*
926021	*AC1-080 C*	*2.27*

© PJM Interconnection 2020. All rights reserved

926051	*AC1-083 C O1*	*2.78*
926271	*AC1-105 C O1*	*1.87*
926641	*AC1-145 C*	*6.49*
927261	*AC1-222 C*	*1.98*

© PJM Interconnection 2020. All rights reserved

15.2 Index 2

(DVP - AEP) The 4ALTVSTA-05OTTER 138 kV line (from bus 314667 to bus 242741 ckt 1) loads from 103.29% to 110.6% (AC power flow) of its normal rating (167 MVA) for non-contingency condition. This project contributes approximately 12.29 MW to the thermal violation.

Bus Number	*Bus Name*	*Full Contribution*
247284	*05LEESVG*	*1.66*
246843	*05SMG1*	*1.01*
246844	*05SMG2*	*2.66*
246845	*05SMG3*	*1.56*
246846	*05SMG4*	*2.75*
246847	*05SMG5*	*1.04*
315156	*1HALLBR1*	*2.86*
315266	*1PLYWOOD A*	*0.39*
933941	*AD1-017 C*	*0.56*
934311	*AD1-055 C*	*1.38*
938451	*AE1-064 C*	*5.18*
940081	*AE1-250 C*	*5.03*
941801	*AE2-185 C*	*12.29*
941821	*AE2-187 C*	*12.29*
942671	*AE2-283 C*	*13.52*
942751	*AE2-291 C*	*13.27*
942761	*AE2-292 C O1*	*16.52*
LTF	*BLUEG*	*1.28*
LTF	*CANNELTON*	*0.06*
LTF	*CARR*	*0.01*
LTF	*CBM-S2*	*1.2*
LTF	*COFFEEN*	*0.1*
LTF	*COTTONWOOD*	*< 0.01*
LTF	*CPLE*	*0.8*
LTF	*DUCKCREEK*	*0.24*
LTF	*EDWARDS*	*0.11*
LTF	*FARMERCITY*	*0.05*
LTF	*GIBSON*	*0.05*
LTF	*NEWTON*	*0.28*
LTF	*PRAIRIE*	*0.4*
LTF	*RENSSELAER*	*0.01*
LTF	*SMITHLAND*	*0.02*
LTF	*TILTON*	*0.15*
LTF	*TRIMBLE*	*0.14*
LTF	*TVA*	*0.04*

© PJM Interconnection 2020. All rights reserved

919841	*AA2-070*	*0.51*
925661	*AC1-042 C*	*5.45*
925991	*AC1-075 C*	*6.8*
926021	*AC1-080 C*	*2.27*
926051	*AC1-083 C O1*	*2.78*
926271	*AC1-105 C O1*	*1.87*
926641	*AC1-145 C*	*6.49*
927261	*AC1-222 C*	*1.98*

© PJM Interconnection 2020. All rights reserved

15.3 Index 3

(AEP - AEP) The 05BANSTR-05EDAN 2 138 kV line (from bus 242549 to bus 242632 ckt 1) loads from 118.63% to 121.98% (AC power flow) of its emergency rating (296 MVA) for the line fault with failed breaker contingency outage of 'AEP_P4_#10213_05CLOV4 EQ 999_A'. This project contributes approximately 10.19 MW to the thermal violation.

CONTINGENCY 'AEP_P4_#10213_05CLOV4 EQ 999_A'

OPEN BRANCH FROM BUS 242560 TO BUS 242607 CKT 1 / 242560 05BONSCK 138 242607 05CLOVRD 138 1

OPEN BRANCH FROM BUS 242560 TO BUS 242840 CKT 1 / 242560 05BONSCK 138 242840 05VINTON 138 1

OPEN BRANCH FROM BUS 242607 TO BUS 243892 CKT 1 / 242607 05CLOVRD 138 243892 05MEADS8 138 1

OPEN BRANCH FROM BUS 243892 TO BUS 242720 CKT 1 / 243892 05MEADS8 138 242720 05MONETA 138 1

OPEN BRANCH FROM BUS 242720 TO BUS 242775 CKT 1 / 242720 05MONETA 138 242775 05ROCKCA 138 1

OPEN BRANCH FROM BUS 242773 TO BUS 242840 CKT 1 / 242773 05ROANO1 138 242840 05VINTON 138 1

OPEN BRANCH FROM BUS 242775 TO BUS 247499 CKT 1 / 242775 05ROCKCA 138 247499 05SMITHMTN2 138 1

OPEN BRANCH FROM BUS 243892 TO BUS 243893 CKT Z1 / 243892 05MEADS8 138 243893 05MEADS 8 24.9 Z1

END

Bus Number	*Bus Name*	*Full Contribution*
247284	*05LEESVG*	*1.9*
244012	*05PINNACLE*	*-1.17*
246843	*05SMG1*	*3.34*
246844	*05SMG2*	*8.81*
246845	*05SMG3*	*5.17*
246846	*05SMG4*	*9.1*
246847	*05SMG5*	*3.44*

© PJM Interconnection 2020. All rights reserved

315156	1HALLBR1	1.45
933941	AD1-017 C	3.8
933942	AD1-017 E	6.2
935241	AD1-161 C	2.61
935242	AD1-161 E	2.15
940081	AE1-250 C	57.23
940082	AE1-250 E	38.15
941801	AE2-185 C	6.12
941802	AE2-185 E	4.08
941821	AE2-187 C	6.12
941822	AE2-187 E	4.08
942671	AE2-283 C	6.73
942672	AE2-283 E	3.53
942751	AE2-291 C	6.08
942752	AE2-291 E	4.05
942761	AE2-292 C O1	7.57
942762	AE2-292 E O1	5.05
LTF	BLUEG	0.31
LTF	CALDERWOOD	0.4
LTF	CANNELTON	0.05
LTF	CARR	0.03
LTF	CATAWBA	0.6
LTF	CHEOAH	0.38
LTF	CHILHOWEE	0.13
LTF	COFFEEN	0.09
LTF	COTTONWOOD	1.2
LTF	DUCKCREEK	0.15
LTF	EDWARDS	0.06
LTF	FARMERCITY	0.09
LTF	G-007	0.12
LTF	GIBSON	0.02
LTF	HAMLET	1.25
LTF	NEWTON	0.22
LTF	O-066	0.73
LTF	PRAIRIE	0.67
LTF	RENSSELAER	0.03
LTF	SANTEETLA	0.12
LTF	SMITHLAND	0.07
LTF	TILTON	0.06
LTF	TRIMBLE	0.03
LTF	TVA	0.96
LTF	UNIONPOWER	0.59
919841	AA2-070	1.67
924572	AB2-109 E	0.7
925661	AC1-042 C	2.71
925662	AC1-042 E	4.42
925991	AC1-075 C	2.88
925992	AC1-075 E	1.63

© PJM Interconnection 2020. All rights reserved

926021	*AC1-080 C*	*0.96*
926022	*AC1-080 E*	*0.54*
926051	*AC1-083 C O1*	*19.01*
926052	*AC1-083 E O1*	*31.02*
926521	*AC1-123 C O1*	*12.76*
926522	*AC1-123 E O1*	*6.01*
926641	*AC1-145 C*	*3.23*
926642	*AC1-145 E*	*5.27*

© PJM Interconnection 2020. All rights reserved

15.4 Index 4

(AEP - AEP) The 05OTTER-05JOHNMT 138 kV line (from bus 242741 to bus 242687 ckt 1) loads from 100.92% to 108.22% (AC power flow) of its normal rating (167 MVA) for non-contingency condition. This project contributes approximately 12.29 MW to the thermal violation.

Bus Number	*Bus Name*	*Full Contribution*
247284	*05LEESVG*	*1.66*
246843	*05SMG1*	*1.01*
246844	*05SMG2*	*2.66*
246845	*05SMG3*	*1.56*
246846	*05SMG4*	*2.75*
246847	*05SMG5*	*1.04*
315156	*1HALLBR1*	*2.86*
315266	*1PLYWOOD A*	*0.39*
933941	*AD1-017 C*	*0.56*
934311	*AD1-055 C*	*1.38*
938451	*AE1-064 C*	*5.18*
940081	*AE1-250 C*	*5.03*
941801	*AE2-185 C*	*12.29*
941821	*AE2-187 C*	*12.29*
942671	*AE2-283 C*	*13.52*
942751	*AE2-291 C*	*13.27*
942761	*AE2-292 C O1*	*16.52*
LTF	*BLUEG*	*1.28*
LTF	*CANNELTON*	*0.06*
LTF	*CARR*	*0.01*
LTF	*CBM-S2*	*1.2*
LTF	*COFFEEN*	*0.1*
LTF	*COTTONWOOD*	*< 0.01*
LTF	*CPLE*	*0.8*
LTF	*DUCKCREEK*	*0.24*
LTF	*EDWARDS*	*0.11*
LTF	*FARMERCITY*	*0.05*
LTF	*GIBSON*	*0.05*
LTF	*NEWTON*	*0.28*
LTF	*PRAIRIE*	*0.4*
LTF	*RENSSELAER*	*0.01*
LTF	*SMITHLAND*	*0.02*
LTF	*TILTON*	*0.15*
LTF	*TRIMBLE*	*0.14*
LTF	*TVA*	*0.04*
919841	*AA2-070*	*0.51*
925661	*AC1-042 C*	*5.45*
925991	*AC1-075 C*	*6.8*

© PJM Interconnection 2020. All rights reserved

926021	*AC1-080 C*	*2.27*
926051	*AC1-083 C O1*	*2.78*
926271	*AC1-105 C O1*	*1.87*
926641	*AC1-145 C*	*6.49*
927261	*AC1-222 C*	*1.98*

© PJM Interconnection 2020. All rights reserved

15.5 Index 5

(AEP - AEP) The 05SMITHMTN2-05ROCKCA 138 kV line (from bus 247499 to bus 242775 ckt 1) loads from 102.09% to 104.36% (AC power flow) of its emergency rating (277 MVA) for the single line contingency outage of 'AEP_P1-2_#5366-B'. This project contributes approximately 6.35 MW to the thermal violation.

CONTINGENCY 'AEP_P1-2_#5366-B'

OPEN BRANCH FROM BUS 242549 TO BUS 940080 CKT 1 / 242549 05BANSTR 138 940080 AE1-250 TAP 138 1

OPEN BRANCH FROM BUS 242549 TO BUS 242632 CKT 1 / 242549 05BANSTR 138 242632 05EDAN 2 138 1

OPEN BRANCH FROM BUS 242549 TO BUS 314668 CKT Z1 / 242549 05BANSTR 138 314668 4BANISTR 138 Z1

END

Bus Number	*Bus Name*	*Full Contribution*
247284	*05LEESVG*	*2.*
242889	*05REUSENS*	*0.06*
246843	*05SMG1*	*3.52*
246844	*05SMG2*	*9.27*
246845	*05SMG3*	*5.44*
246846	*05SMG4*	*9.58*
246847	*05SMG5*	*3.63*
315156	*1HALLBR1*	*1.51*
933941	*AD1-017 C*	*2.54*
935241	*AD1-161 C*	*2.24*
940081	*AE1-250 C*	*30.1*
941801	*AE2-185 C*	*6.35*
941821	*AE2-187 C*	*6.35*
942671	*AE2-283 C*	*6.99*
942751	*AE2-291 C*	*7.01*
942761	*AE2-292 C O1*	*8.73*
LTF	*BLUEG*	*1.2*
LTF	*CALDERWOOD*	*0.03*
LTF	*CANNELTON*	*0.06*
LTF	*CARR*	*0.05*
LTF	*CBM-S2*	*0.49*
LTF	*CHEOAH*	*0.02*
LTF	*CHILHOWEE*	*< 0.01*

© PJM Interconnection 2020. All rights reserved

LTF	*COFFEEN*	*0.11*
LTF	*COTTONWOOD*	*0.19*
LTF	*CPLE*	*0.35*
LTF	*DUCKCREEK*	*0.25*
LTF	*EDWARDS*	*0.11*
LTF	*FARMERCITY*	*0.06*
LTF	*GIBSON*	*0.05*
LTF	*NEWTON*	*0.29*
LTF	*PRAIRIE*	*0.46*
LTF	*RENSSELAER*	*0.04*
LTF	*SANTEETLA*	*< 0.01*
LTF	*SMITHLAND*	*0.03*
LTF	*TILTON*	*0.14*
LTF	*TRIMBLE*	*0.13*
LTF	*TVA*	*0.17*
LTF	*UNIONPOWER*	*0.03*
919841	*AA2-070*	*1.76*
924571	*AB2-109 C*	*0.04*
925661	*AC1-042 C*	*2.82*
925991	*AC1-075 C*	*3.59*
926021	*AC1-080 C*	*1.2*
926051	*AC1-083 C O1*	*12.71*
926521	*AC1-123 C O1*	*13.12*
926641	*AC1-145 C*	*3.35*

© PJM Interconnection 2020. All rights reserved

16 Contingency Details

Contingency Name	Contingency Definition
AEP_P1-2_#5366-B	CONTINGENCY 'AEP_P1-2_#5366-B' OPEN BRANCH FROM BUS 242549 TO BUS 940080 CKT 1 / 242549 05BANSTR 138 940080 AE1-250 TAP 138 1 OPEN BRANCH FROM BUS 242549 TO BUS 242632 CKT 1 / 242549 05BANSTR 138 242632 05EDAN 2 138 1 OPEN BRANCH FROM BUS 242549 TO BUS 314668 CKT Z1 / 242549 05BANSTR 138 314668 4BANISTR 138 Z1 END
AEP_P1-2_#5419	CONTINGENCY 'AEP_P1-2_#5419' OPEN BRANCH FROM BUS 242607 TO BUS 243892 CKT 1 / 242607 05CLOVRD 138 243892 05MEADS8 138 1 OPEN BRANCH FROM BUS 243892 TO BUS 242720 CKT 1 / 243892 05MEADS8 138 242720 05MONETA 138 1 OPEN BRANCH FROM BUS 243892 TO BUS 243893 CKT Z1 / 243892 05MEADS8 138 243893 05MEADS 8 24.9 Z1 OPEN BRANCH FROM BUS 242720 TO BUS 242775 CKT 1 / 242720 05MONETA 138 242775 05ROCKCA 138 1 OPEN BRANCH FROM BUS 242775 TO BUS 247499 CKT 1 / 242775 05ROCKCA 138 247499 05SMITHMTN2 138 1 END
AEP_P1-2_#5471-A	CONTINGENCY 'AEP_P1-2_#5471-A' OPEN BRANCH FROM BUS 242575 TO BUS 242737 CKT 1 / 242575 05CAMDLM 138 242737 05OPOSSUMCK 138 1 OPEN BRANCH FROM BUS 242575 TO BUS 242781 CKT 1 / 242575 05CAMDLM 138 242781 05RUSTBR 138 1 OPEN BRANCH FROM BUS 242575 TO BUS 926520 CKT 1 / 242575 05CAMDLM 138 926520 AC1-123 TAP 138 1 END
AEP_P1-2_#8677	CONTINGENCY 'AEP_P1-2_#8677' OPEN BRANCH FROM BUS 242629 TO BUS 242632 CKT 1 / 242629 05E.MONU 138 242632 05EDAN 2 138 1 OPEN BRANCH FROM BUS 242629 TO BUS 242770 CKT 1 / 242629 05E.MONU 138 242770 05RIGIS 138 1

© PJM Interconnection 2020. All rights reserved

	OPEN BRANCH FROM BUS 242629 TO BUS 243948 CKT 1 / 242629 05E.MONU 138 243948 05BRANTLY 69.0 1 REMOVE SWSHUNT FROM BUS 242629 / 242629 05E.MONU 138 END
AEP_P4_#10210_05CLOVRD 138_A2	CONTINGENCY 'AEP_P4_#10210_05CLOVRD 138_A2' /* ADDED/REVISED 2021 OPEN BRANCH FROM BUS 242607 TO BUS 243892 CKT 1 / 242607 05CLOVRD 138 243892 05MEADS8 138 1 OPEN BRANCH FROM BUS 243892 TO BUS 242720 CKT 1 / 243892 05MEADS8 138 242720 05MONETA 138 1 OPEN BRANCH FROM BUS 242720 TO BUS 242775 CKT 1 / 242720 05MONETA 138 242775 05ROCKCA 138 1 OPEN BRANCH FROM BUS 242775 TO BUS 247499 CKT 1 / 242775 05ROCKCA 138 247499 05SMITHMTN2 138 1 OPEN BRANCH FROM BUS 243892 TO BUS 243893 CKT Z1 / 243892 05MEADS8 138 243893 05MEADS 8 24.9 Z1 REMOVE LOAD D8 FROM BUS 242607 END
AEP_P4_#10213_05CLOV4 EQ 999_A	CONTINGENCY 'AEP_P4_#10213_05CLOV4 EQ 999_A' OPEN BRANCH FROM BUS 242560 TO BUS 242607 CKT 1 / 242560 05BONSCK 138 242607 05CLOVRD 138 1 OPEN BRANCH FROM BUS 242560 TO BUS 242840 CKT 1 / 242560 05BONSCK 138 242840 05VINTON 138 1 OPEN BRANCH FROM BUS 242607 TO BUS 243892 CKT 1 / 242607 05CLOVRD 138 243892 05MEADS8 138 1 OPEN BRANCH FROM BUS 243892 TO BUS 242720 CKT 1 / 243892 05MEADS8 138 242720 05MONETA 138 1 OPEN BRANCH FROM BUS 242720 TO BUS 242775 CKT 1 / 242720 05MONETA 138 242775 05ROCKCA 138 1 OPEN BRANCH FROM BUS 242773 TO BUS 242840 CKT 1 / 242773 05ROANO1 138 242840 05VINTON 138 1 OPEN BRANCH FROM BUS 242775 TO BUS 247499 CKT 1 / 242775 05ROCKCA 138 247499 05SMITHMTN2 138 1 OPEN BRANCH FROM BUS 243892 TO BUS 243893 CKT Z1 / 243892 05MEADS8 138 243893 05MEADS 8 24.9 Z1 END

© PJM Interconnection 2020. All rights reserved

DVP_P1-2: LN 31_AE2-291A	CONTINGENCY 'DVP_P1-2: LN 31_AE2-291A' OPEN BRANCH FROM BUS 942750 TO BUS 314714 CKT 1 /* 3GRIT 115.00 - 3PERTH 115.00 END
DVP_P1-2: LN 35_AE2-185B_AE2-283A	CONTINGENCY 'DVP_P1-2: LN 35_AE2-185B_AE2-283A' OPEN BRANCH FROM BUS 941800 TO BUS 942670 CKT 1 /* 2GLADYS 69.000 - 2STONE MIL 69.000 END

© PJM Interconnection 2020. All rights reserved

Affected Systems

© PJM Interconnection 2020. All rights reserved

17 Affected Systems

17.1 TVA

TVA Impacts to be determined during later study phases (as applicable).

17.2 Duke Energy Progress

Duke Energy Progress Impacts to be determined during later study phases (as applicable).

© PJM Interconnection 2020. All rights reserved

Short Circuit

© PJM Interconnection 2020. All rights reserved

18 Short Circuit

The following Breakers are overdutied:

None.

© PJM Interconnection 2020. All rights reserved

Stability

© PJM Interconnection 2020. All rights reserved

19 Stability Analysis and Reactive Power Assessment

To be finalized in Facilities Study phase.

© PJM Interconnection 2020. All rights reserved

Light Load Load Flow

© PJM Interconnection 2020. All rights reserved

20 Light Load Analysis

No reinforcements identified.

© PJM Interconnection 2020. All rights reserved
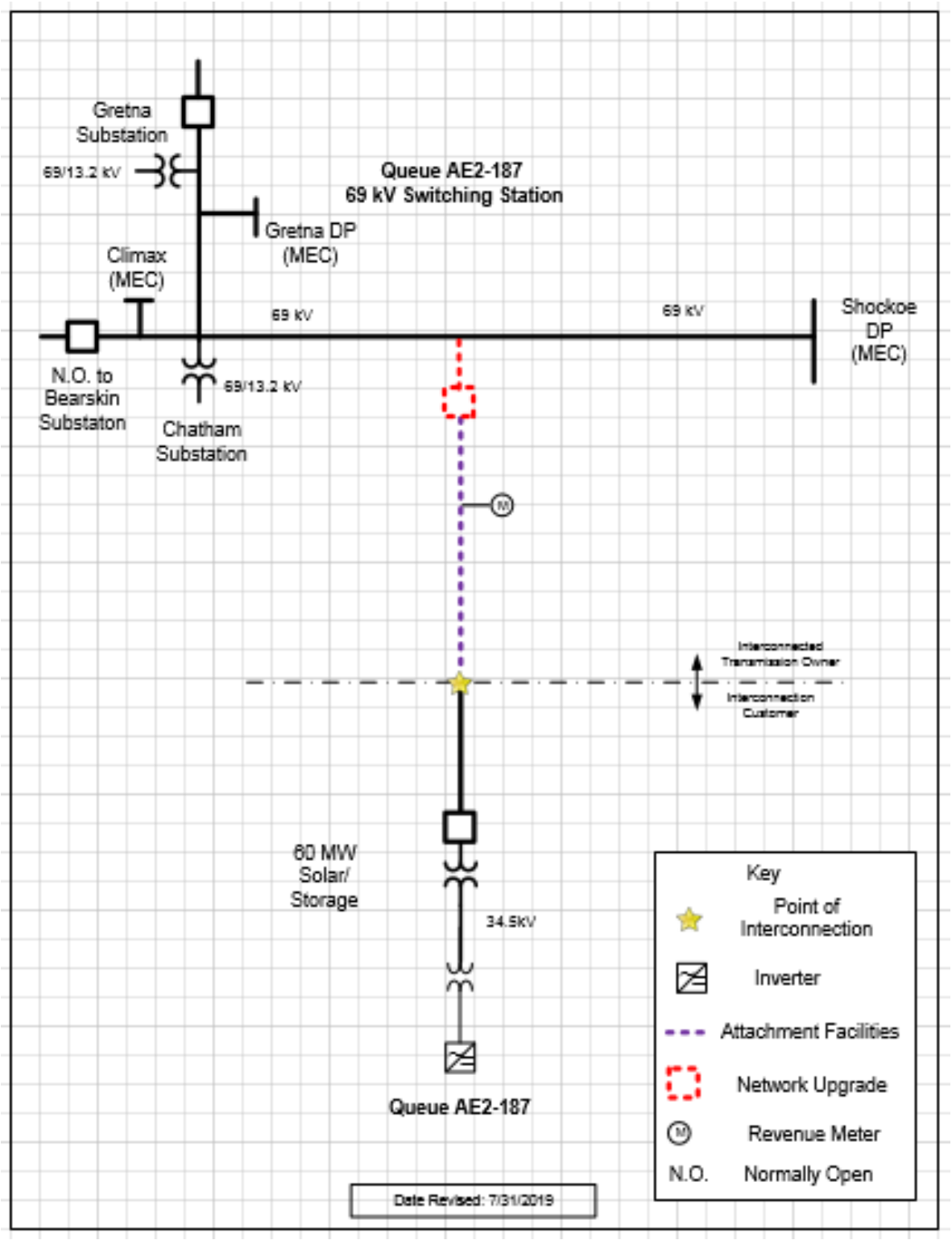
Attachment 1: One Line Diagram